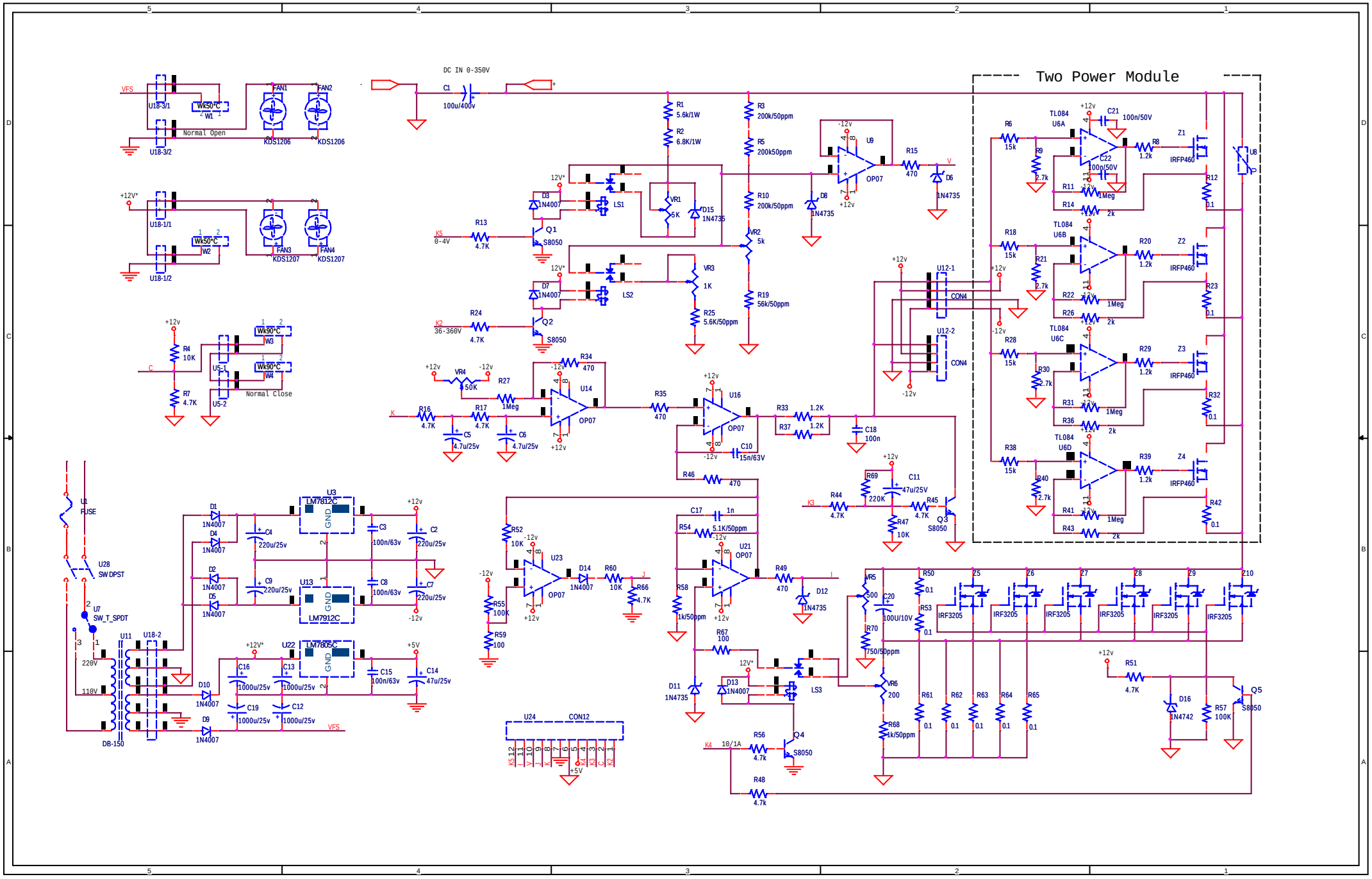
Two Power Module
DC IN 0-350V
C1
100u/400v
VFS
U18-3/1
Wk50°C
W1
Normal Open
U18-3/2
FAN1
FAN2
KDS1206
KDS1206
+12V*
U18-1/1
Wk50°C
W2
U18-1/2
FAN3
FAN4
KDS1207
KDS1207
+12v
R4
10K
C
R7
4.7K
U5-1
U5-2
Wk90°C
W3
Wk90°C
W4
Normal Close
U1
FUSE
U28
SW DPST
U7
SW_T_SPDT
220V
110V
U11
U18-2
DB-150
D1
1N4007
D4
1N4007
D2
1N4007
D5
1N4007
D10
1N4007
D9
1N4007
U3
LM7812C
U13
LM7912C
U22
LM7805C
GND
C4
220u/25v
C9
220u/25v
C3
100n/63v
C8
100n/63v
C2
220u/25v
C7
220u/25v
C16
1000u/25v
C19
1000u/25v
C13
1000u/25v
C12
1000u/25v
C15
100n/63v
C14
47u/25v
+5V
-12v
R1
5.6k/1W
R2
6.8K/1W
R3
200k/50ppm
R5
200k50ppm
R10
200k/50ppm
R19
56k/50ppm
R25
5.6K/50ppm
VR1
5K
VR2
5k
VR3
1K
D15
1N4735
D8
1N4735
U9
OP07
R15
470
D6
1N4735
12V*
D3
1N4007
LS1
Q1
S8050
K5
0-4V
R13
4.7K
D7
1N4007
LS2
Q2
S8050
K2
36-360V
R24
4.7K
VR4
50K
R27
1Meg
R34
470
U14
OP07
R16
4.7K
R17
4.7K
C5
4.7u/25v
C6
4.7u/25v
K
R35
470
U16
OP07
C10
15n/63V
R33
1.2K
R37
1.2K
C18
100n
R46
470
R44
4.7K
R69
220K
C11
47u/25V
R45
4.7K
R47
10K
Q3
S8050
K3
U12-1
U12-2
CON4
CON4
R52
10K
R55
100K
R59
100
U23
OP07
D14
1N4007
R60
10K
R66
4.7K
J
C17
1n
R54
5.1K/50ppm
U21
OP07
R58
1k/50ppm
R67
100
D11
1N4735
D13
1N4007
LS3
R49
470
I
D12
1N4735
VR5
500
C20
100U/10V
R70
750/50ppm
VR6
200
R68
1k/50ppm
R50
0.1
R53
0.1
R61
0.1
R62
0.1
R63
0.1
R64
0.1
R65
0.1
Z5
Z6
Z7
Z8
Z9
Z10
IRF3205
U24
CON12
K5 12
11
10
9
8
7
6
5
4
3
2
1
+5V
K4
10/1A
R56
4.7k
Q4
S8050
R48
4.7k
R51
4.7K
D16
1N4742
R57
100K
Q5
S8050
R6
15k
R9
2.7k
TL084
U6A
C21
100n/50V
R8
1.2k
Z1
IRFP460
C22
100n/50V
R11
1Meg
R14
2k
R12
0.1
U8
R18
15k
R21
2.7k
U6B
R20
1.2k
Z2
IRFP460
R22
1Meg
R26
2k
R23
0.1
R28
15k
R30
2.7k
U6C
R29
1.2k
Z3
IRFP460
R31
1Meg
R36
2k
R32
0.1
R38
15k
R40
2.7k
U6D
R39
1.2k
Z4
IRFP460
R41
1Meg
R43
2k
R42
0.1