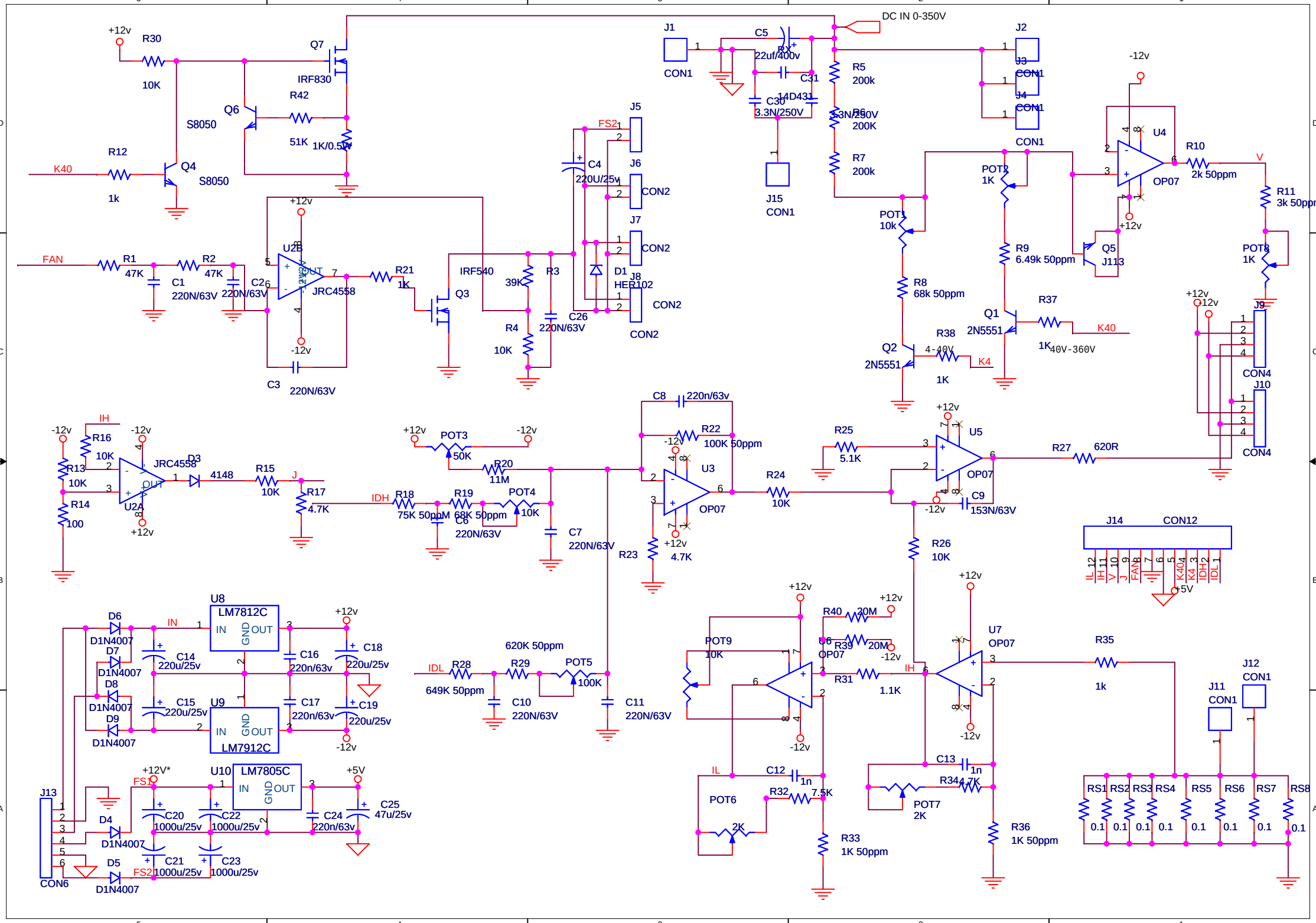

DC IN 0-350V
+12v
R30
10K
Q7
IRF830
Q6
S8050
R42
51K
1K/0.5W
R12
1k
K40
Q4
S8050
J1
CON1
C5
22uf/400v
RX
C31
14D431
C30
3.3N/250V
R5
200k
R6
3.3N/250V
200K
R7
200k
J15
CON1
J2
J3
CON1
J4
CON1
CON1
-12v
U4
OP07
R10
2k 50ppm
V
R11
3k 50ppm
POT2
1K
POT1
10k
R9
6.49k 50ppm
Q5
J113
POT8
1K
R8
68k 50ppm
Q1
2N5551
R37
1K
40V-360V
K40
R38
4-40V
K4
Q2
2N5551
1K
J9
CON4
J10
CON4
FAN
R1
47K
R2
47K
C1
220N/63V
C2
220N/63V
U2B
JRC4558
R21
1K
Q3
IRF540
39K
R3
R4
10K
C26
220N/63V
C4
220U/25v
FS2
J5
J6
CON2
J7
CON2
D1
HER102
J8
CON2
CON2
C3
220N/63V
IH
R16
10K
R13
10K
R14
100
U2A
JRC4558
D3
4148
R15
10K
J
R17
4.7K
IDH
R18
75K 50ppM
R19
68K 50ppm
POT4
10K
C6
220N/63V
C7
220N/63V
POT3
50K
R20
11M
C8
220n/63v
R22
100K 50ppm
U3
OP07
R23
4.7K
R24
10K
R25
5.1K
U5
OP07
C9
153N/63V
R27
620R
R26
10K
J14
CON12
IL
IH
V
J
FAN
K40
K4
IDH
IDL
+5V
U8
LM7812C
IN
GND
OUT
D6
D1N4007
D7
D1N4007
D8
D1N4007
D9
D1N4007
C14
220u/25v
C15
220u/25v
C16
220n/63v
C17
220n/63v
C18
220u/25v
C19
220u/25v
U9
LM7912C
IDL
R28
649K 50ppm
R29
620K 50ppm
POT5
100K
C10
220N/63V
C11
220N/63V
POT9
10K
R40
20M
R39
20M
U6
OP07
R31
1.1K
U7
OP07
R35
1k
J12
CON1
J11
CON1
J13
CON6
+12V*
FS1
U10
LM7805C
+5V
C20
1000u/25v
C22
1000u/25v
C24
220n/63v
C25
47u/25v
D4
D1N4007
D5
D1N4007
C21
1000u/25v
C23
1000u/25v
FS2
IL
C12
1n
R32
7.5K
POT6
2K
R33
1K 50ppm
C13
1n
R34
4.7K
POT7
2K
R36
1K 50ppm
RS1
RS2
RS3
RS4
RS5
RS6
RS7
RS8
0.1